REVISIONS		
ISS	SYMBOL	DESCRIPTION\DATE

FOR CUSTOMER

REMARK: RoHS COMPLIANT

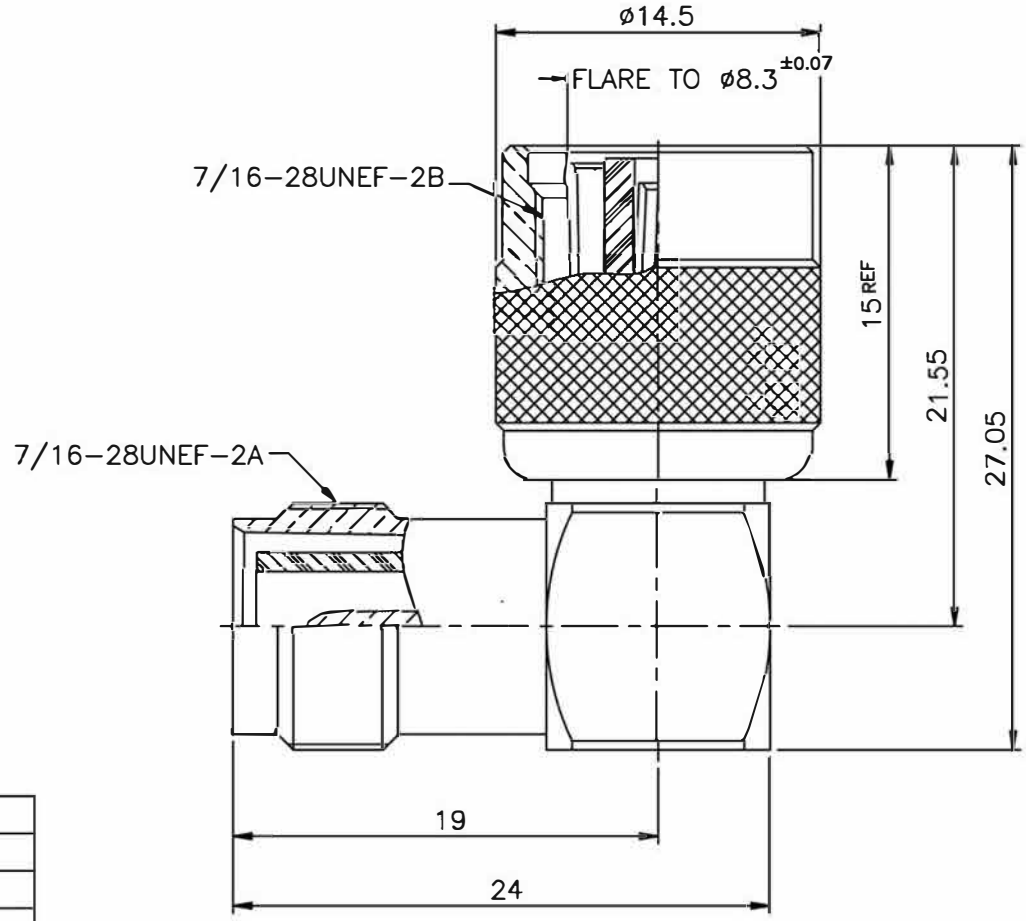

NOTES: FINISH (PLATING THICKNESS IN MICRO–INCHES)
1. BRASS PER QQ–B–626
2. NICKEL PL 70 MIN THICK OVER COPPER STRIKE
3. GOLD PL 3 MIN OVER NICKEL PL 70 MIN THICK OVER COPPER STRIKE
4. TEFLON MIL–P–19468
5. PHOSPHOR BRONZE PER QQ–B–750

NO.	DESCRIPTION	MATERIAL	FINISH	Q'TY	DRAWING NO.
	COVER	NOTE 1	NOTE 2		
	SHELL	NOTE 1	NOTE 2		
	GASKET	SILICONE	RED		
	C RING	SS41	NOTE 2		
	WASHER	DELRIN	NATURAL		
	WASHER	SS41	NOTE 2		
	CONTACT PIN	NOTE 5	NOTE 3		
	INSULATOR	NOTE 4	WHITE		
	BODY	NOTE 1	NOTE 2		
	LOCK RING	NOTE 1	NOTE 2		
	CONTACT PIN	NOTE 1	NOTE 3		
	INSULATOR	NOTE 4	WHITE		
	CUBE BODY	NOTE 1	NOTE 2		

DIMENSIONS ARE IN MILLIMETERS

UNLESS OTHERWISE SPECIFIED TOLERANCES

0.5~6 = ±0.2
>6~30 = ±0.4
>30~120 = ±0.6
>120~315 = ±1
>315~1000 = ±1.6
ANGLES = ±5°

SCALE 3/1 | ISSUE A1

PART NO. RARPTNCJ-RPTNCP

APPROVED DATE

CHECKED DATE

DRAWN DATE

ventev®

TITLE
Right Angle RPTNC Jack to RPTNC Plug Adapter

DRAWING NO.

FILE NO.