REVISION		
ISS	ZONE	DESCRIPTION

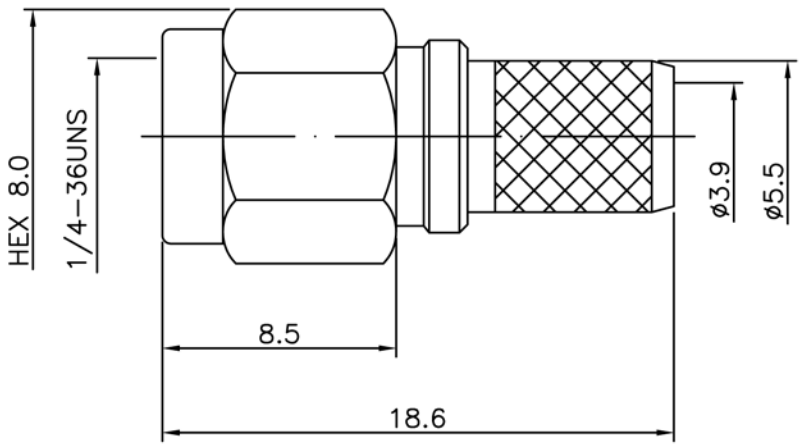

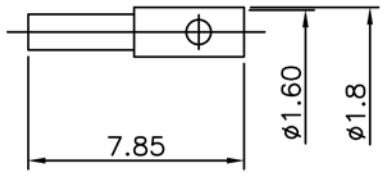

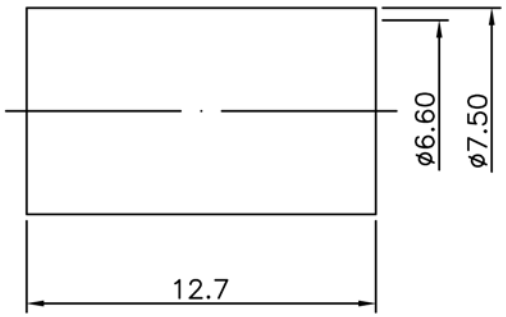

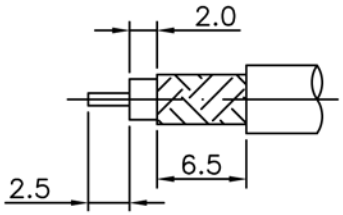

Recommended Stripping Dimensions

NOTE:
1.Impedance: 50Ω
2.Frequency Range: DC 0–18 GHz
3.V.S.W.R.: 1.3 MAX.@ 6GHz
4.Voltage Rating: 500V rms
5.Contact Resistance: Center Contacts: 2.0 mΩ Max
Outer Contacts: 2.0 mΩ Max
6.Insulation Resistance : 5000 MΩ MIN.
7.Operating Temperature Range:–65°~165°C
8.ROHS Compliance.

NO.	DESCRIPTION	MATERIAL	FINISH	Q'TY	DRAWN NO.
7	FERRULE	BRASS	GOLD	1	M–0067
6	PIN	Be Cu	GOLD	1	C–0323
5	BODY	BRASS	GOLD	1	B–0415
4	INSULATOR	TEFLON	NONE	1	T–0266
3	WASHER	STEEL	NONE	1	G–0002
2	GASKET	SILICONE	NONE	1	R–0001
1	SHELL	BRASS	GOLD	1	A–0002

TOLERANCES
DIMENSIONS ARE IN MILLIMETER
UNLESS OTHERWISE SPECIFIED

.X	±0.2
.XX	±0.1
.XXX	±0.05
ANGLES	±5°

SCALE	4/1	ISSUE	A–0

TITLE
RPSMA Plug for TWS-240 Cable

PART NO.
CON-20-240

DRAWN NO.

FILE PATH:

TerraWave Solutions

APPROVED DATE
CHECKED DATE
DRAWN DATE