TerraWave Solutions® 2.4 GHz 10 dBi Fiberglass Omnidirectional Antenna with N-Style Jack Connector

TerraWave's 10 dBi fiberglass omnidirectional antenna is designed for indoor and outdoor 2.4 GHz wireless local area networks. It features a UV stable, vented radome that provides ultimate sustainability against extreme weather conditions such as high temperature, strong winds and rain. It can be mast or wall mounted. Includes a durable mounting bracket. Every TerraWave antenna is covered by the Company's two-year TerraNet warranty program. Visit www.terrawave.com for additional information.

Specifications	
Model	T24100O10006
Frequency Range	2400 ~ 2483 MHz
Bandwidth	83 MHz
Gain	10 dBi
Polarization in Vertical Plane	10°
Polarization in Horizontal Plane	360°
VSWR	-/= 1.5
Nominal Impedance	50 Ohms
Polarization	Vertical
Max Power	100 Watts
Connector	N-Female
Length	30.7”
Weight	0.77 lb
Rated Wind Velocity	135 mph

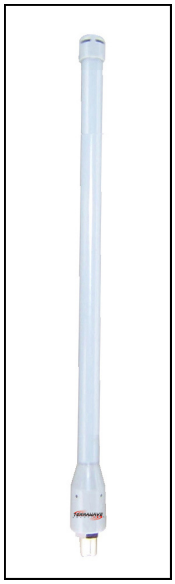

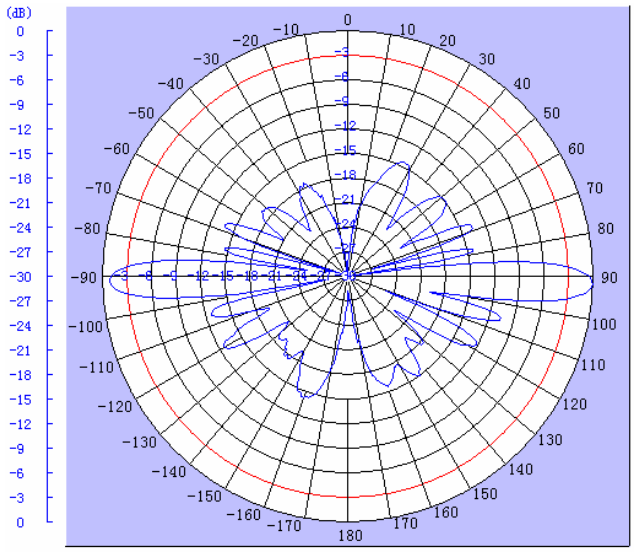

E-Plane

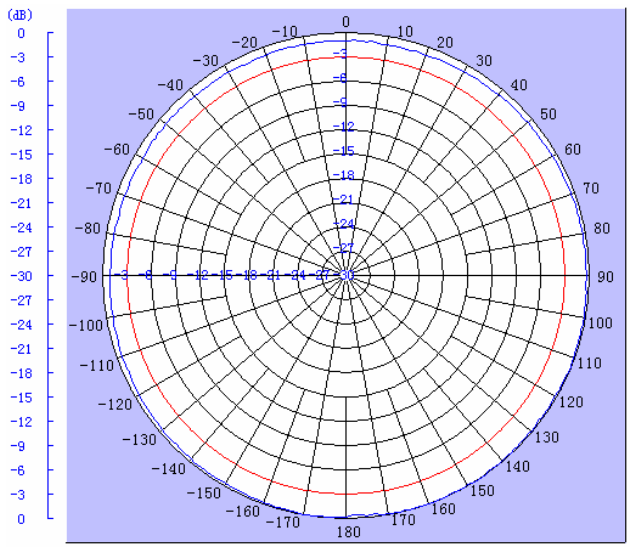

H-Plane

TerraWave Solutions® Fiberglass Omnidirectional Antennas

Mounting Bracket Information for T24040O10006, T24060O10006, T24080O10006, T24100O10006 and T24120O10006

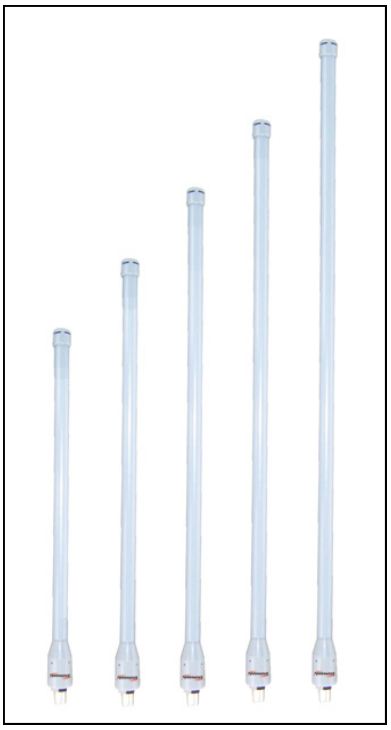

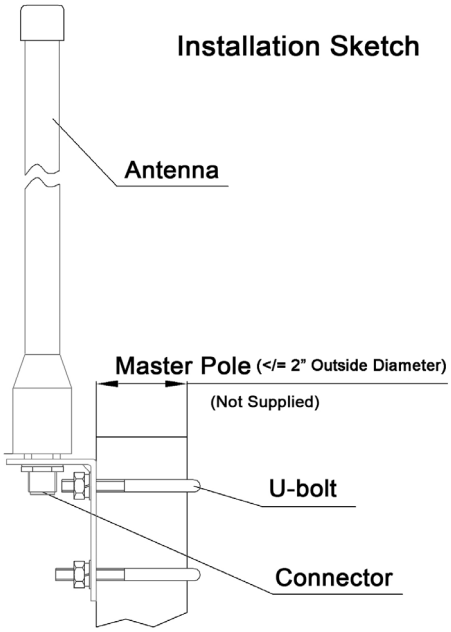

Bracket

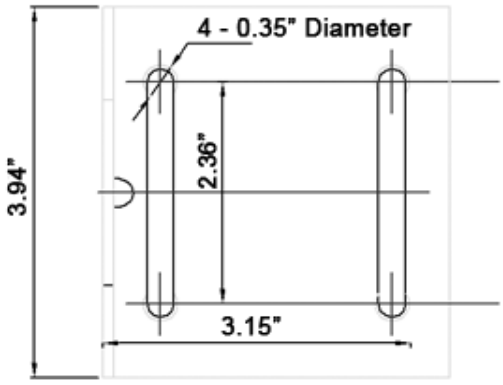

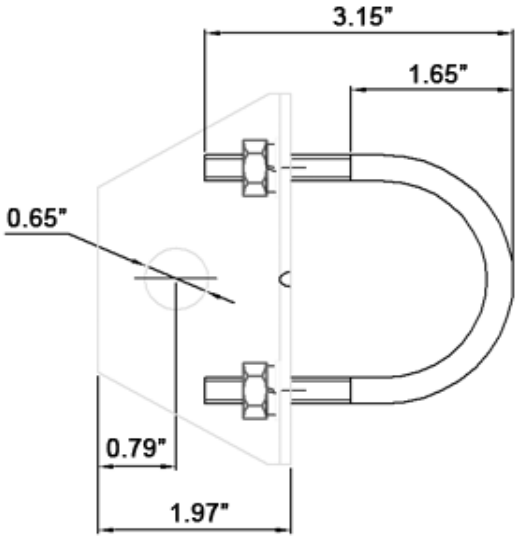

www.terrawave.com | Email: sales@terrawave.com | Phone: 210-375-8482 or 800-851-4965 | 10521 Gulfdale, San Antonio, TX 78216