2.3 - 2.7 GHz 14 dBi MIMO Panel Antenna with N-Style Jack Connectors

Ventev's TerraWave 14 dBi MIMO Panel antenna is designed for applications operating in the 2.3 - 2.7 GHz WiMax LTE MIMO system or 2.4 GHz WLAN MIMO system. This antenna offers outstanding performance in a rugged design. It features a high gain and includes a down-tilt bracket. *Every Ventev TerraWave antenna is covered by the company's two-year warranty program. For questions and to purchase product, contact a Regional Sales Executive at 210-375-8482, 800-851-4965 or sales@ventev.com.*

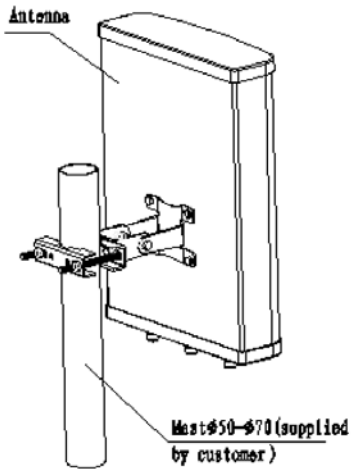

Specifications	
Model	T24140D30006O
Frequency Range	2300 ~ 2700 MHz
Bandwidth	400 MHz
Gain	14 dBi
Horizontal Beamwidth	90°
Vertical Beamwidth	15°
Front-to-Back Ratio	≥ 16 dB
Isolation	≥ 20 dB
VSWR	≤ 1.7
Nominal Impedance	50 Ohms
Maximum Power Rating	100 Watts
Polarization	Vertical
Connector	N-Style Jack (x3)
Dimensions	19" x 11" x 3.5"
Weight	6.58 lbs
Mast Mount Diameter	1.97" ~ 2.76"

E Plane

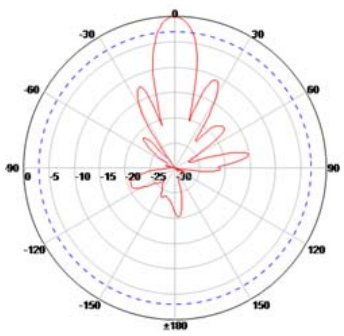
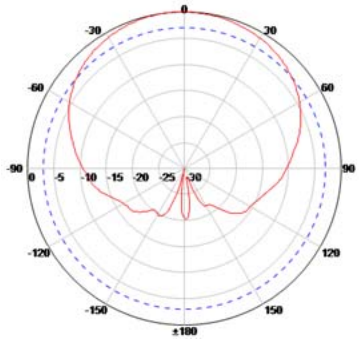
H Plane