14 x 12 x 6 Dart Enclosure, Single Pass Through

1. Install the included cable gland on the box and run ethernet cable in.
2. This enclosure accommodates the Cisco 3800E and 9120AXE access points using both straight and right-angle DART connectors. For straight DART connectors, orient the Cisco low profile bracket in orientation B. Attach mounting bracket to the back plate using QTY (4) #8 screws. See Figure 1.

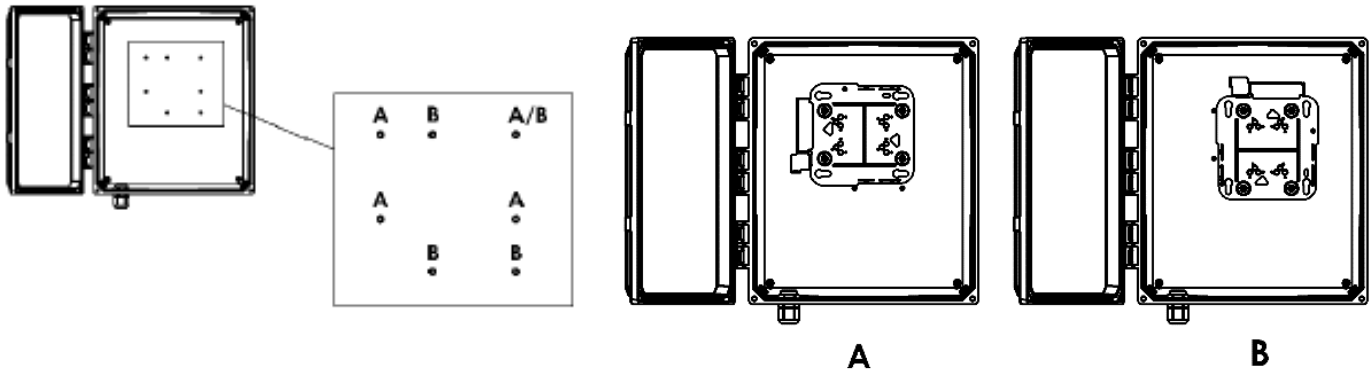

Figure 1

3. Install the cable gland as shown in Figure 2. Tighten cable gland screws to 2 Nm (1.48 lbf ft).
IMPORTANT NOTE: When routing dual lead DART antenna cables through the grommet, seal any gap left between the leads using off-the-shelf silicone.

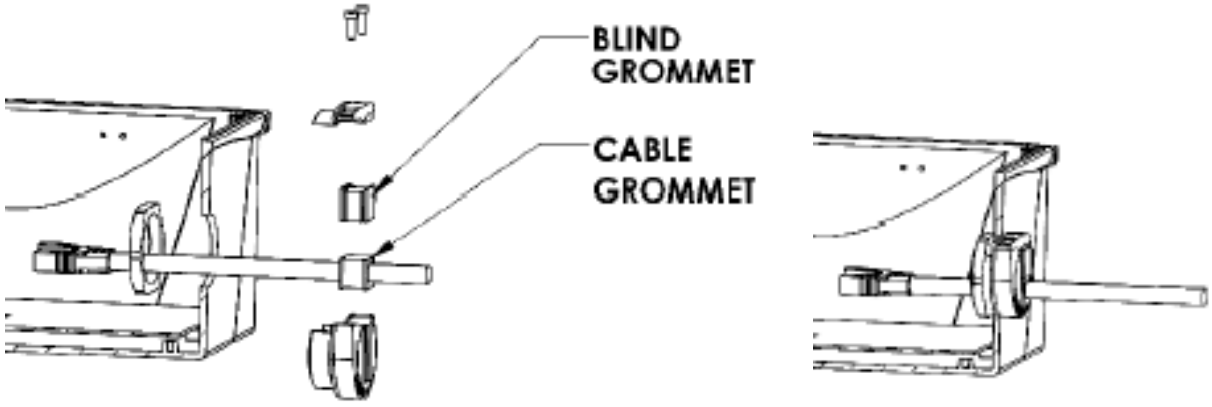

Figure 2

©2026 Hubbell Solutions. All rights reserved.

4. Plug in the ethernet cable and the DART cable and then slide the access point into the mounting bracket.

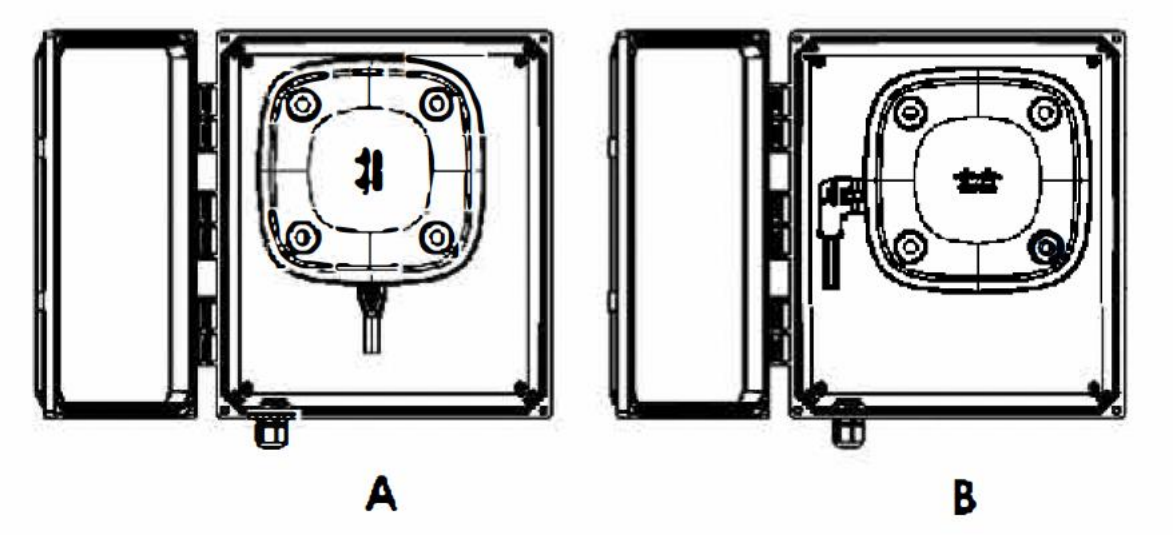

Figure 3

©2026 Hubbell Solutions. All rights reserved.